Name_____

PLEASE SHOW ALL YOUR WORK AS NEATLY AS POSSIBLE :

1) Let $f(x) = \frac{x^4}{2} - \frac{2x^3}{3} - 2x^2 + 3$

a) Find the derivative.
b) Find the critical numbers.

2) Given that : $f(x) = x^3 + \frac{9x^2}{2} + 6x - 3$

a) Find the critical numbers.
b) Find the interval(s) where the function, f(x) , is <u>increasing</u> and the interval(s) where it is <u>decreasing.</u>

3) Let $f(x) = \frac{x^2}{8} - 4\sqrt{x}$

a) Determine the critical number(s).

b) Determine the absolute extrema on $[0, 9]$

4) Given: $f(x) = x + \frac{9}{x} + 2$

a) Find the critical numbers.

b) Use the second derivative test to determine local exterema.

5) Given $f(x) = \dfrac{2x}{(x^2 + 1)}$

a) Find the derivative.

b) Find the critical numbers .

6) $f(x) = 2x^2 + \dfrac{4000}{x} + 10$

a) Find the critical number(s) .

b) Determine the relative extrema.

7) Given : $f(x) = x + 2\sin x \qquad 0 \le x \le 2\pi$

a) Find the increasing and decreasing intervals .

b) Determine relative extrema .

8) $f(x) = x + 2\cos(x) \qquad 0 < x < 2\pi$

a) Find the intervals on which f (x) is concave up and concave down.

b) Find the inflection point(s) , if any.

9) If an open box has square base and a volume of 256 in^3 and is constructed from a tin sheet. Find the dimenstions of the box using the least amount of material.
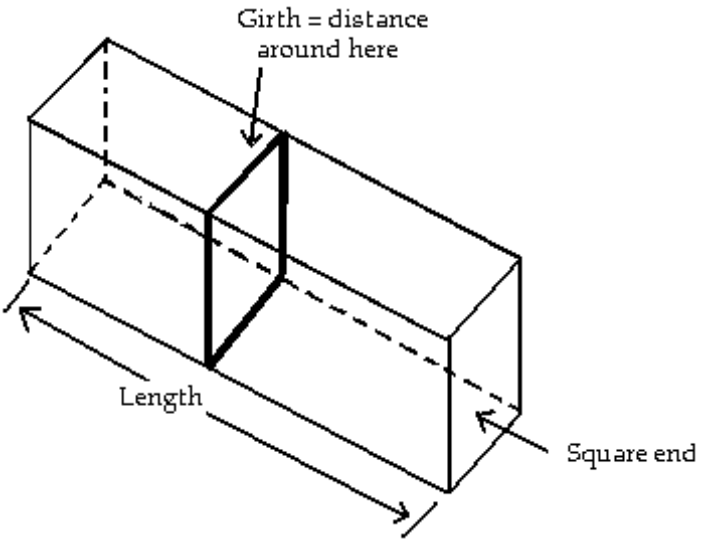
10) A private shipping company will accept a box for domestic shipment only if the sum of its length and girth (distance around) does not exceed 96 in. What dimensions will give a box with a square end the largest possible volume?